NOTES:

- Boiler template is for S, X, & H Series Boilers
- Boiler shown is standard built boiler. Modifications are avalible upon request.
- Overall length of boiler my vary based on gas train sizing.
- Number, size, and location of safety relief valves and openings may change based on design pressure of boiler.
- Some accessories may or may not be shown.

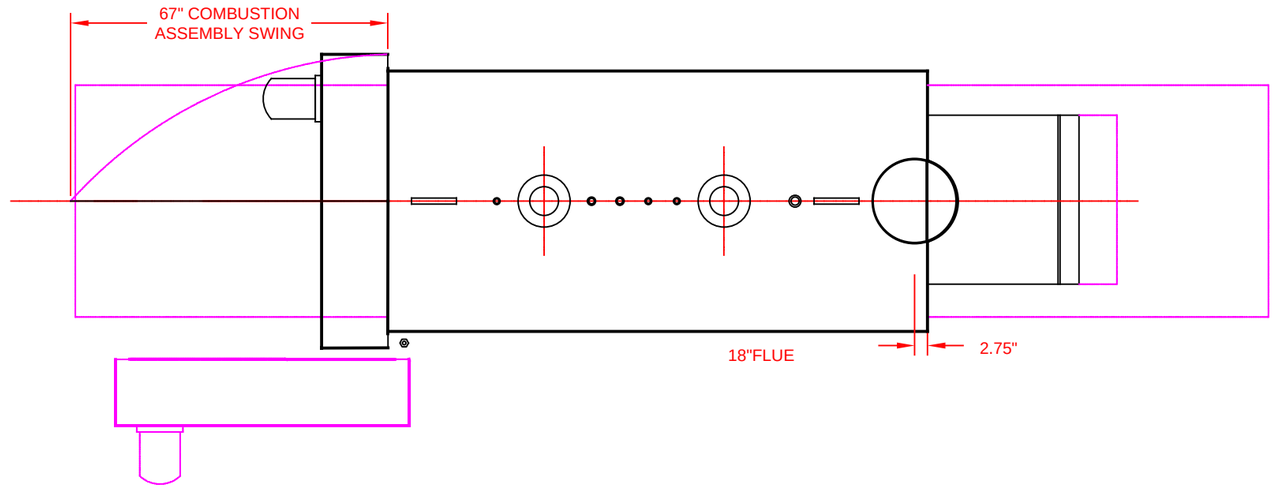

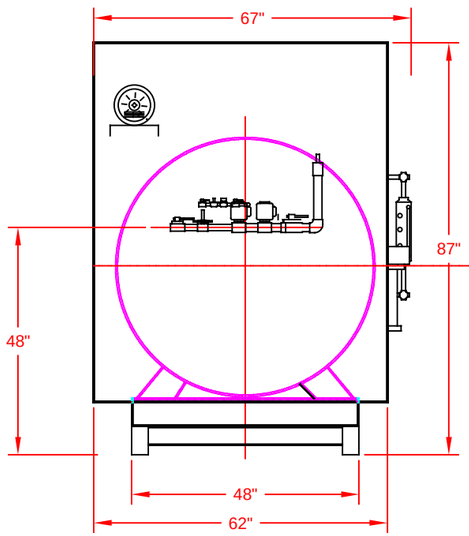

FRONT VIEW

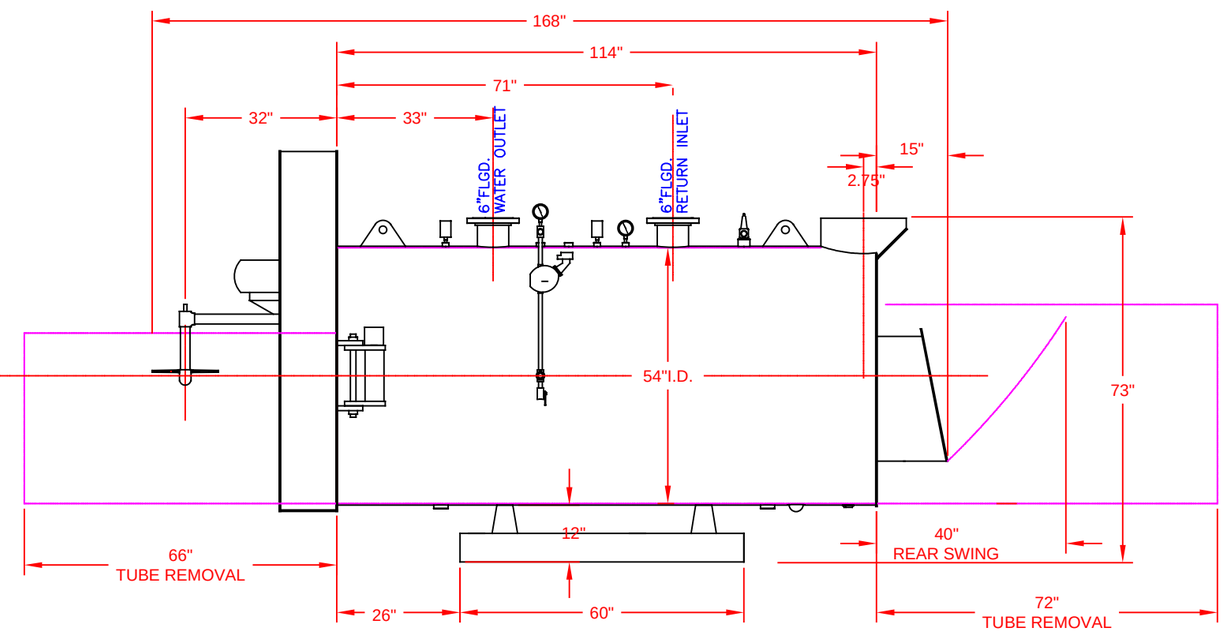

Sellers®
MANUFACTURING CO.
918 West Walnut Street
Danville, KY 40422
Phone: (859) 236-3181
FAX: (859) 236-3184

Proprietary Information

These drawings and/or specifications are the property of Sellers MFG Co. They are issued in strict confidence and shall not be reproduced, copied, or used as the basis for manufacture or sale without permission of the owner.

REV.	DATE	DESCRIPTION OF CHANGE	DRAWN	APPROVED
3				
2				
1				

WEIGHT lbs

MATERIAL

FINISH

UNLESS OTHERWISE SPECIFIED:
DIMENSIONS ARE IN INCHES
TOLERANCES:
FRACTIONAL ± 1/32
X.XX ± .015
X.XXX ± .005
ANGLES ± 1 DEG
DO NOT SCALE DRAWING

TEMPLATE LAYOUT 200HP HOT WATER BOILER

SCALE: 1:32	DRAWN BY: MMY		DATE: 02/25/2021
DWG. SIZE: B	APPR. BY:		DATE:
SHEET: 1 OF 1	DRAWING NUMBER:		REV 0